TENNESSEE D.O.T.
DESIGN DIVISION
FILE NO. ---

TYPE	YEAR	PROJECT NO.	SHEET NO.
CONST.	2014	NH-29(86)	

CONST. NO. 65001-3268-14

BORING LEGEND

- BORINGS DRILLED IN ASSOCIATION WITH S&ME REPORT DATED JAN 4, 2013
- BORINGS DRILLED IN ASSOCIATION WITH CURRENT PROJECT

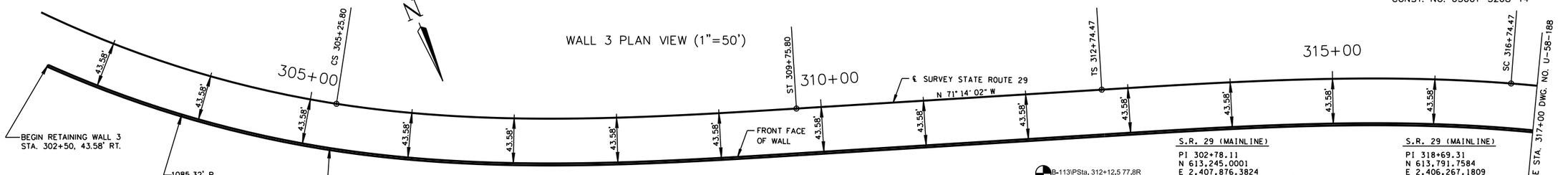

NOTE: SEE ROADWAY CONSTRUCTION PLANS SHEETS 9A, 10A AND 11A FOR ADDITIONAL INFORMATION REGARDING DRAINAGE FEATURES IN THE VICINITY OF THE RETAINING WALL.

NOTE: SEE ROADWAY CONSTRUCTION PLANS SHEETS 9, 10 AND 11 FOR ADDITIONAL INFORMATION REGARDING UTILITIES IN THE VICINITY OF THE RETAINING WALL.

S.R. 29 (MAINLINE)

PI 302+78.11
N 613,245.0001
E 2,407,876.3824
Δs 57° 57' 19" (LT)
θs 12° 22' 30"
Δc 33° 12' 19" (LT)
D 5° 30' 00"
R 1,041.74
Lc 603.73
Ts 806.04
Ls 450.00
LT 300.74
ST 150.67
Es 158.32
X 447.91
Y 32.29
k 224.65
p 8.09
SE 0.074 FT/FT
DES. SPEED 50 MPH

S.R. 29 (MAINLINE)

PI 318+69.31
N 613,791.7584
E 2,406,267.1809
Δs 30° 44' 12" (RT)
θs 8° 00' 00"
Δc 14° 44' 12" (RT)
D 4° 00' 00"
R 1,432.39
Lc 368.42
Ts 594.85
Ls 400.00
LT 266.94
ST 133.58
Es 57.94
X 399.22
Y 18.59
k 199.87
p 4.65
SE 0.063 FT/FT
DES. SPEED 50 MPH

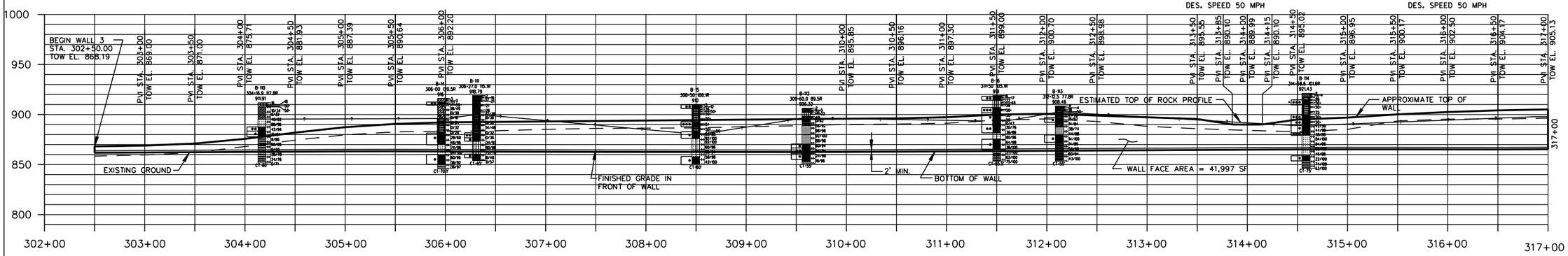

WALL 3 ELEVATION VIEW (1"=50')

NOTE: THE RETAINING WALL PAY QUANTITY IS BASED ON THE SURFACE AREA BETWEEN THE TOP OF WALL AND THE BOTTOM OF WALL. THE ESTIMATED QUANTITY FOR THE CONCEPTUAL DRAWING: 88,459 S.F.

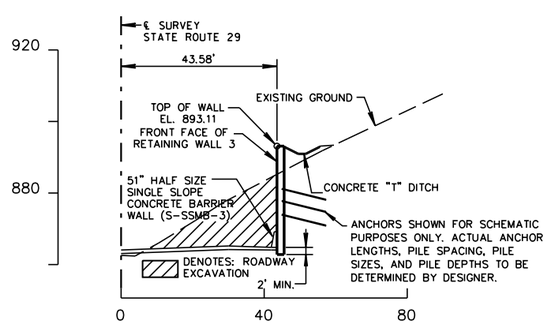

TYPICAL SECTION STATION 307+00
(1" = 20')

ESTIMATED QUANTITIES
604-07.13
RETAINING WALL (WALL NO. 1) S.F.
88,459

NOTE: ASHLAR STONE FINISH TO BE USED ON FRONT FACE OF WALL. TEXTURE FINISH ALL EXPOSED WALL SURFACES TO 1'-0" BELOW FINAL GROUND LINES. (MOUNTAIN GREY, FED. SPEC. NO. 36440). COST OF ASHLAR STONE AND TEXTURE FINISH TO BE INCLUDED IN THE UNIT PRICE BID FOR ITEM NO. 604-07.13.

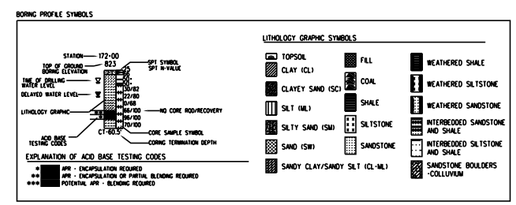

NOTE: PROPOSED RETAINING WALL IS LOCATED IN AN AREA THAT IS SUSCEPTIBLE TO VEHICULAR IMPACT. SEE TENNESSEE DEPARTMENT OF TRANSPORTATION EARTH RETAINING STRUCTURES MANUAL FOR THE MINIMUM STRUCTURAL REQUIREMENTS THAT SHALL BE MET BY THE WALL SYSTEM TO PROVIDE PROTECTION FROM IMPACT. WALL SYSTEMS NOT MEETING THE REQUIREMENTS SHALL HAVE A 51 INCH TALL BARRIER RAIL PLACED DIRECTLY IN FRONT OF THE WALL WITH ALL COST OF THE BARRIER WALL AND END TREATMENTS (S-GR-24) INCLUDED IN THE SQUARE FOOT COST OF THE PROPOSED RETAINING WALL.

STATE OF TENNESSEE
DEPARTMENT OF TRANSPORTATION
BUREAU OF PLANNING & DEVELOPMENT

RETAINING WALL 3
CONCEPTUAL DRAWING
FROM STA. 302+50.00
TO STA. 317+00.00
STATE ROUTE 29
MORGAN COUNTY, TENNESSEE
2014

U-58-187