TENNESSEE D.O.T.
DESIGN DIVISION
FILE NO. ---

TYPE	YEAR	PROJECT NO.	SHEET NO.
CONST.	2014	NH-29(86)	

CONST. NO. 65001-3268-14

BORING LEGEND

BORINGS DRILLED IN ASSOCIATION WITH CURRENT PROJECT

S.R. 29 (MAINLINE)

PI 340+22.35
N 615,368.2894
E 2,404,772.8910
Δs 28° 01' 36" (RT)
θs 8° 00' 00"
Δc 12° 01' 36" (RT)
D 4° 00' 00"
R 1,432.39
Lc 300.67
Ts 558.52
Ls 400.00
LT 266.94
ST 133.58
Es 48.73
X 399.22
Y 18.59
k 199.87
p 4.65
SE 0.063 FT/FT
DES. SPEED 50 MPH

NOTE: SEE ROADWAY CONSTRUCTION PLANS SHEET 13A FOR ADDITIONAL INFORMATION REGARDING DRAINAGE FEATURES IN THE VICINITY OF THE RETAINING WALL.

NOTE: SEE ROADWAY CONSTRUCTION PLANS SHEET 13 FOR ADDITIONAL INFORMATION REGARDING UTILITIES IN THE VICINITY OF THE RETAINING WALL.

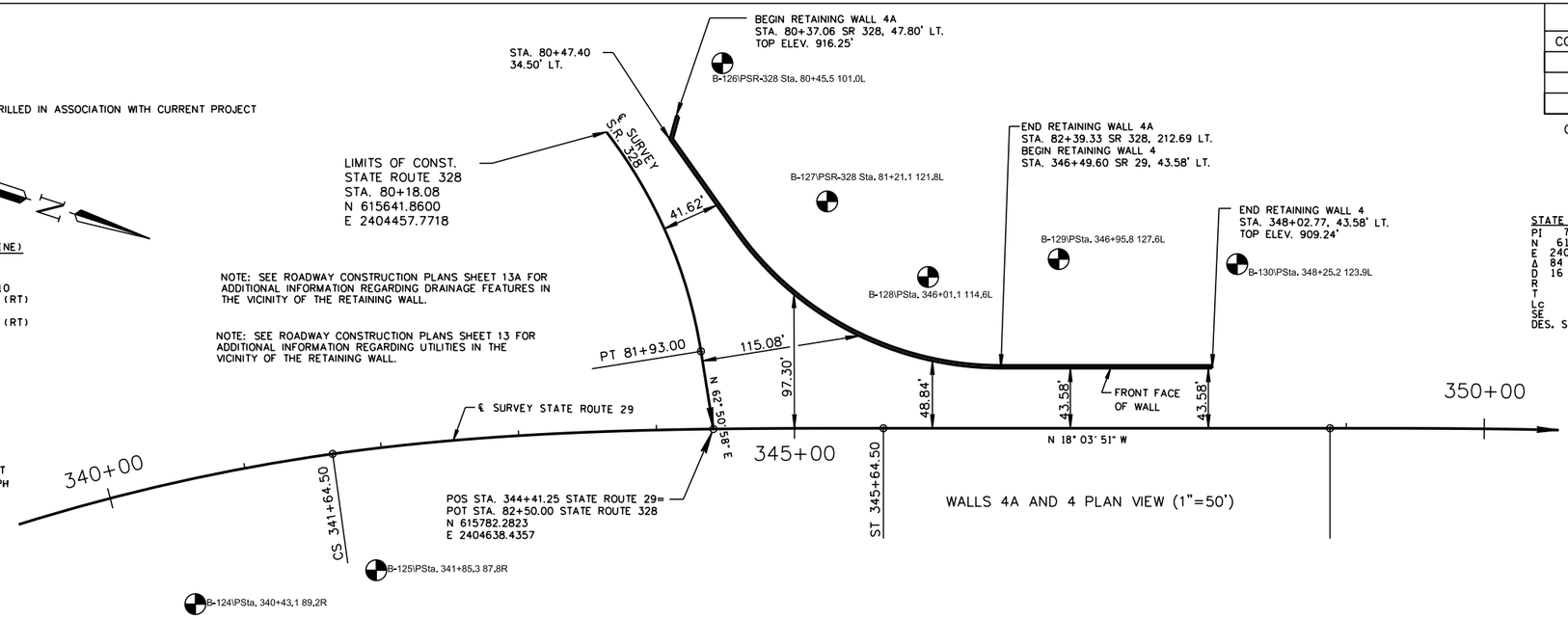

WALLS 4A AND 4 PLAN VIEW (1"=50')

STATE ROUTE 328

PI 79+93.54
N 615611.3428
E 2404305.1179
Δ 84 °01'17"RT
D 16 °15'00"
R 352.59
T 317.59
Lc 517.05
SE 0.074 FT/FT
DES. SPEED 30 MPH

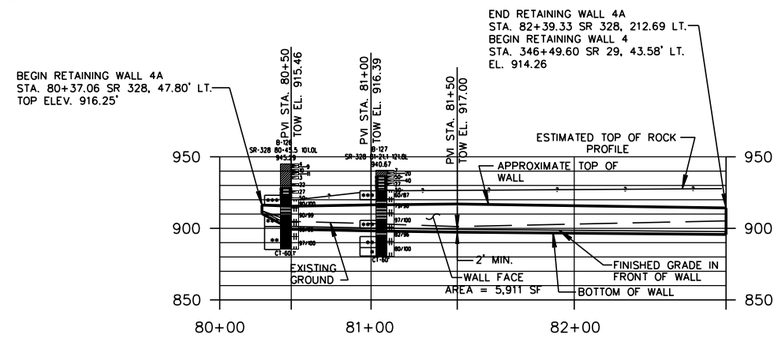

WALL 4A ELEVATION VIEW (1"=50')

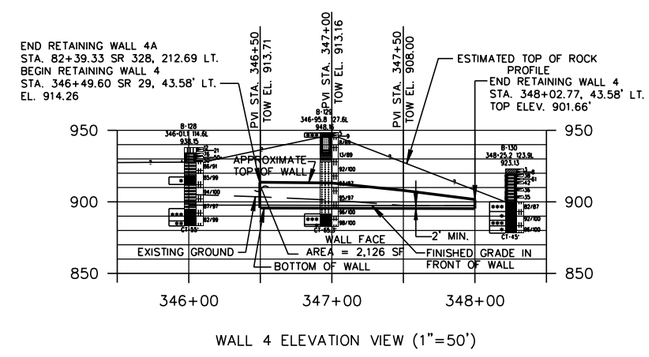

WALL 4 ELEVATION VIEW (1"=50')

ESTIMATED QUANTITIES
604-07.14
RETAINING WALL (WALL NO. 1) S.F.
8,037

NOTE: THE RETAINING WALL PAY QUANTITY IS BASED ON THE SURFACE AREA BETWEEN THE TOP OF WALL AND THE BOTTOM OF WALL. THE ESTIMATED QUANTITY FOR THE CONCEPTUAL DRAWING: 8,037 S.F.

NOTE: ASHLAR STONE FINISH TO BE USED ON FRONT FACE OF WALL. TEXTURE FINISH ALL EXPOSED WALL SURFACES TO 1'-0" BELOW FINAL GROUND LINES. (MOUNTAIN GREY, FED. SPEC. NO. 36440). COST OF ASHLAR STONE AND TEXTURE FINISH TO BE INCLUDED IN THE UNIT PRICE BID FOR ITEM NO. 604-07.14.

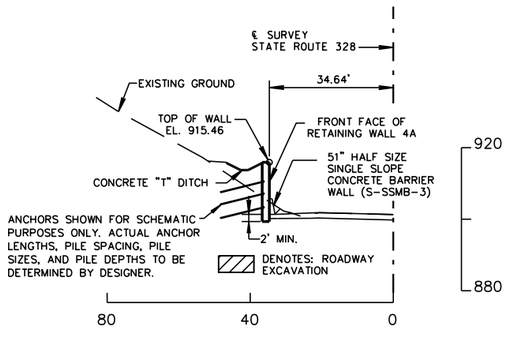

TYPICAL SECTION STATION 80+50 SR 328
(1" = 20')

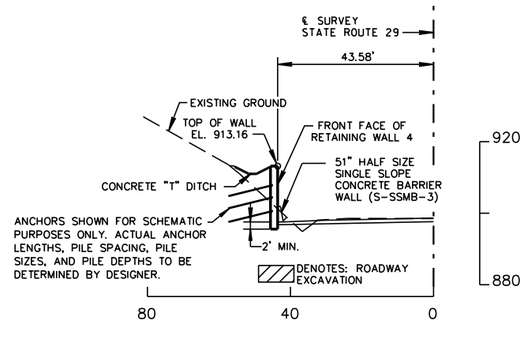

TYPICAL SECTION STATION 347+00 SR 29
(1" = 20')

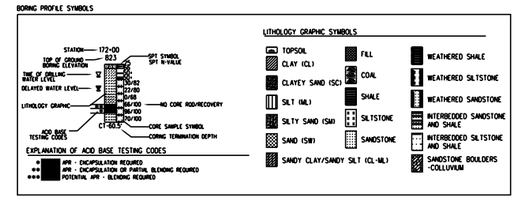

NOTE: PROPOSED RETAINING WALL IS LOCATED IN AN AREA THAT IS SUSCEPTIBLE TO VEHICULAR IMPACT. SEE TENNESSEE DEPARTMENT OF TRANSPORTATION EARTH RETAINING STRUCTURES MANUAL FOR THE MINIMUM STRUCTURAL REQUIREMENTS THAT SHALL BE MET BY THE WALL SYSTEM TO PROVIDE PROTECTION FROM IMPACT. WALL SYSTEMS NOT MEETING THE REQUIREMENTS SHALL HAVE A 51 INCH TALL BARRIER RAIL PLACED DIRECTLY IN FRONT OF THE WALL WITH ALL COST OF THE BARRIER WALL AND END TREATMENTS (S-GR-24) INCLUDED IN THE SQUARE FOOT COST OF THE PROPOSED RETAINING WALL.

STATE OF TENNESSEE
DEPARTMENT OF TRANSPORTATION
BUREAU OF PLANNING & DEVELOPMENT

RETAINING WALLS 4 AND 4A
CONCEPTUAL DRAWING
FROM STA. 80+37.06
(STATE ROUTE 328)
TO STA. 348+02.77
(STATE ROUTE 29)
MORGAN COUNTY, TENNESSEE
2014

U-58-189